All of SINOLIFT machines are high quality, we aim to provide the best materials at the best prices. Although the demand is high for our products, we do have weekly shipments so stock levels are always replenished. If you require a pallet truck that you could not locate within our shop, please get in touch with us and we can help source it for you. Our aim is to supply and service new and existing customers for the long haul, which means we aim to go above and beyond to secure future business relations.

Manufacturer			SINOLIFT
Model			**EPT22 PLUS**
Power type			Lithium Battery
Type of operation			Pedestrian
Load capacity/rated load	q	kg	2000
Load center distance	c	mm	600
Alex centre to fork face	x	mm	820 (890)
Wheelbase	y	mm	1193
Total weight (with battery)		kg	146 (152)
Axle Load(laden):drive side/load-bearing side		kg	//
Axle Load(unladen):drive side/load-bearing side		kg	//
Tyre type			Polyurethane
Tyre size (load wheel) tandem		mm	φ80x70(85mm) or φ74x70(75mm)
Tyre size (load wheel) single		mm	φ80x93(85mm) or φ74x93(75mm)
Tyre size (drive wheel)		mm	φ190x70
Wheels quantity, front/rear (x=driving wheels)			4/1x+2
Track width,front,driving side	b10	mm	460
Track width,rear,loading side	b11	mm	400(520)
Lifting height	h3	mm	180(200)
Height of tiller arm in driving position, Min.- Max.	h14	mm	561-1215
Lowered height	h13	mm	75(85)
Overall length	l1	mm	1566(1616)
Length to fork face	l2	mm	390
Overall width	b1	mm	550(680)
Fork dimension	s/e/l	mm	50x160x1150(1200)
Fork spread width	b5	mm	550/680
Ground clearance at center of wheelbase (Min.)	m2	mm	30
Aisle width for pallets 1000x1200 crossways	Ast	mm	1790
Aisle width for pallets 800x1200 crossways	Ast	mm	1740
Turning radius	Wa	mm	1361/1511
Traveling speed (laden/unladen)		km/h	4.5/4.5
Lifting speed (laden/unladen)		mm/s	22/17
Lowering speed (laden/unladen)		mm/s	26/30
Max.gradient performance (laden/unladen)		%	6/20
Service brake type			Electromagnetic
Driving motor rating (DC) s2 60min.		kw	0.8
Lifting motor rating s3 15%		kw	0.6
Battery type			Li-ion
Battery voltage/capacity k5		V/Ah	48/15
Battery weight		kg	4.22/5.68
Charger		V/A	48/6
Controller model			DC
Steering type			Mechanical
Sound level at driver's ear according to EN 12 053		dB(A)	70

The parameters in the table are of the standard model. For more infomation, please contact us.

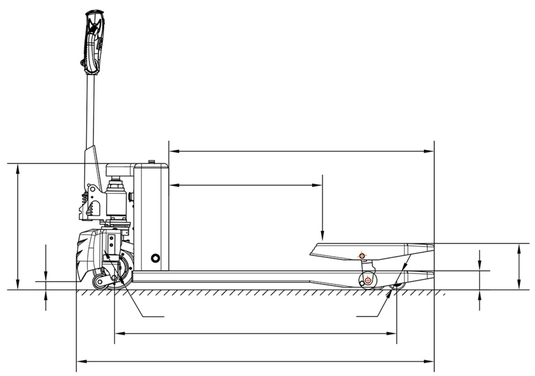

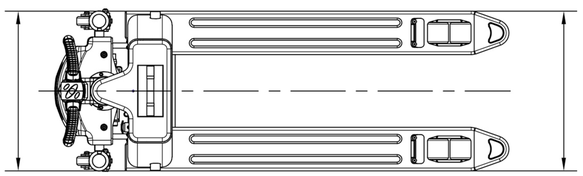

Spercial size of width and length can be made according to customer's requirement, All specifications and figures are subject to change withou notice for improvement.

SINOLIFT
For material handling

EPT22 PLUS

LITHIUM BATTERY OPERATED PALLET TRUCK
ISO9001
CE

SHANGHAI SINOLIFT MECHANICAL AND ELECTRICAL EQUIPMENT CO., LTD.

Address: No. 2471 Dachuan Road, Nanhui Industry Park, Pudong New District, Shanghai, 201399,P.R.China
Tel: 0086-21-68014500 or 0086-21-58003681
Fax: 0086-21-68014262
Website: www.sinolift.com www.sinoliftchina.com www.sinolifttruck.com
Skype: sinolift
Whatsapp & Mobile: 0086 138 1757 2420

EPT22: THE AFFORDABLE ENTRY-LEVEL MODEL

With a lifting capacity of up to 2.200 kg, the all-electric EPT22 pallet truck is ideally equipped for your warehouse. Unlike other entry-level models of electric pallet trucks, not only the forward and reverse travel is electric, but also the lifting work. This eliminates the tedious and time-consuming task of pumping up the stored goods. The pallet or pallet cage is lifted effortlessly at the touch of a button on the tiller. This is not only faster, but also ergonomic for every employee who works with this device. The speed of the pallet truck (Max. 4.5 km/h) can be conveniently and continuously controlled using the practical toggle switch on the drawbar. If the toggle switch is released or deliberately set to the neutral position, the pallet truck brakes automatically. This is not only easier when handling the pallet truck, but is also a safety-relevant function. This prevents the electromagnetic brake from rolling away uncontrollably, thereby preventing accidents.

2.5 hours charge 3.5 hours working time

GOOD PERFORMANCE AND POWERFUL DRIVE THANKS TO THE 48V LITHIUM-ION BATTERY

The powerful lithium-ion battery from SINOLIFT is the centerpiece and drive of the EPT22. the intelligent charging system prevents overcharging when simply charging the device. This not only increases the service life of the battery, but also prevents temperature build-up during the charging process. The battery charge can be easily and conveniently read off the housing of the device so that you always know when the next charge is required. The battery capacity is 3 - 5 h for uninterrupted use of the electric pallet truck. After the pallet truck has been used, it is simply hung up on the charging station. After 2.5 h the battery is then fully operational again and the machine can continue to transport goods with power and maneuverability.

EPT22 Plus combines material handling and weighing intelligently, improving the working efficiency and reducing the labor intensity of the operator at the same time. It is with the function of speed reduction at turning, Electromagnetic lock, driving with handle in vertical position , fast charging, easy replacement lithium battery, and high precision weighing display with optional of printer.

Standard Equipment

- 0.8 kW DC motor (maintenance free)
- High-Performance Lithium battery
- External charger
- Upright walking
- Butterfly drive switches
- Separated lift/lower buttons
- CAN bus architecture
- LCD display
- Gas spring assisted tiller arm
- Driving with upright tiller arm
- Turtle speed mode
- Auto lock on slopes
- Dia. 190mm polyurethane drive wheel
- Bogie fork wheels
- Climber wheels at fork nose
- Castor wheels with integrated foot protection
- Easy accessible emergency switch
- Tiller arm safety button
- Horn switch
- Closed cover design
- Foot protection cover

Options

- Dia. 210mm polyurethane drive wheel
- Climber wheels at fork nose
- Castor wheels with integrated foot protection
- Easy accessible emergency switch
- Tiller arm safety button
- Horn switch
- Closed cover design
- Foot protection cover

Hydraulics
DC pump and chrome plated cylinder provide for smooth and efficient lifting.

Forks
• Tapered fork tips and tandem PU rollers with fork tip rollers for easy pallet entry and exit.
• Reinforced chassis and forks with tapered ends offers easy pallet entry.

Load Rollers
High performance polyurethane load rollers, for queit running and better grip. Single load rollers are option.

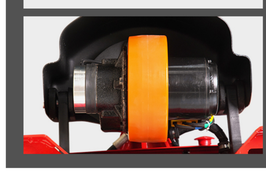

Drive
Maintenance free brushless (DC) wheel hub motor with no wearable components like carbon brushes or contactors to replace over time offer long-asting operation and low maintenance.

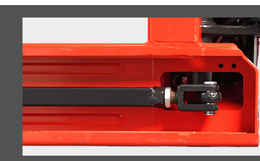

Reinforced Forks
Laser cutting, high strength, easier entrance/exit design for pallet, also for double pallet.

Serviceability
Removable covers and modular design of components provides for easy maintenance with simple hand tools. Two piece drive wheel reduces complexity of tire changes.

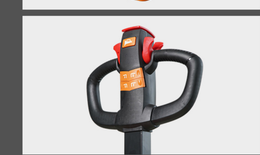

Ergonomic Tiller
All the switch buttons are integrated in the humanized touch position and can be easily reached by operators.

Battery
• 48V/15Ah rechargeable lithium ion battery revolutionary easy exchange HD battery delivers up to 3.5 hours of operation and can be fully charged within 2.5 hours.